Key Driver



版本 V1.8

2020-12-18

Room603, Building18, Pan-Asia Center,
No.636, Duantang East Road, Ningbo China
Zip: 315010

Tel: 0086-574-27825625
Fax: 0086-574-27825518
Email: larry@smartsmith.cn

Ningbo Smart Smith Engineering Technology Co., LTD (“SSET”)

Our company initiated by a number of senior experts in the industry, set up with the joint master of the forging industry chain and auxiliary machinery manufacturers jointly, our team of experts are leaders in their respective fields, and production bases also have more than 20 years of production and service experience.

The company combines the advantages of all parties and integrates resources in the industrial chain to become the best forging equipment manufacturer in China and also a solution integrator in the field of metal forming. With practical Chinese equipment and accurate solutions to create better efficiency for our customers around the world.

The services we provide：

1. Propose solutions according to customer requirements , provide customized production line;
2. Automatic transformation of existing old forging press production equipment and production line;
3. Forging and heat treatment process technical consultation;
4. Production and sales of forging and auxiliary equipment;
5. Production and sales of related die and equipment parts.

As one of the few domestic suppliers who can provide the automation solutions for complete set of forging equipment, we have a strong technical team and a large number of mature solutions that actually operate in the factory. Therefore, while providing a wide range of solutions for customers to choose from, similar examples of production lines are also available for guests to visit.

SSET provides 7X24 hours of technical advisory services to solve customer problems in a timely manner. All issues will be initially responded within 48 hours.

SSET follows the rules of international trade, observe contract, heavy commitment. We are committed to establish long-term and win-win situation cooperation with our customers, and are ready to share the progress of our latest technology. We are also willing to cooperate with research institutes and corporations of companies in various countries to make friends with all over the world with our trade cooperation as a link.

Room603, Building18, Pan-Asia Center,
No.636, Duantang East Road, Ningbo China
Zip: 315010
Tel: 0086-574-27825625
Fax: 0086-574-27825518
Email: larry@smartsmith.cn

Key Driver

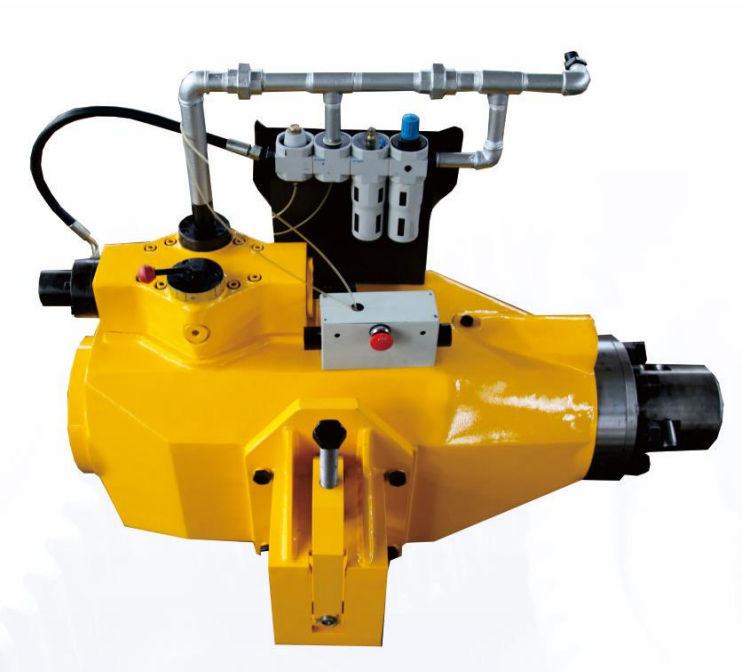

Advantage

- Save labor. Usually only one forklift worker and one operator are needed.
- Only compressed air, no power supply.
- The impact force is adjustable.

Key driver (wedge driver) is to be used for the driving in and out of mounting wedges to forge hammers in combination with a suitable and permissible forklift.

In many forging plants, A Suspending Hammer is usually used to strike the wedge iron when need tightening and striking out, which has great disadvantages. On the one hand, a plant usually has only one Suspending Hammer, no matter big or small wedge irons can only use this one, the strike force and direction cannot be controlled, and the wedge iron probably cannot exit in the future when it was damaged by the big force. On the other hand, it needs multi-people to operate at this process, which is unsafe and easy to cause other losses due to improper operation. The use of our key driver can effectively adjust and control the strike energy, as it assembled on the appropriate forklift, it would be easier to operation on the forging hammer with safe, efficient, and reliable.

Starting and operation of the driver is only possible in two-handed operation. The Key/wedge driving machine be operated by only one operator.





◆ The main components

ID	Name	Function
1	Piston driver	Caeeise out the strike movement.
2	Pressure accumulator	Ensures for additional piston acceleration.
3	Slide valve	Contral of the impact piston.
4	Rotary slide	Setting of impact force adjustment. Barrier to pressurised air network, emptying of pressure
5	Two-hards button	Safe trigger device for strike movement.
6	Bounce piston	Safely component to protect the piston rod.
7	Maintenance unit	Pressurised air treament.
8	Mounting bracket	Fitting to the fork of a forklift.

◆ Sizes of Key Driver

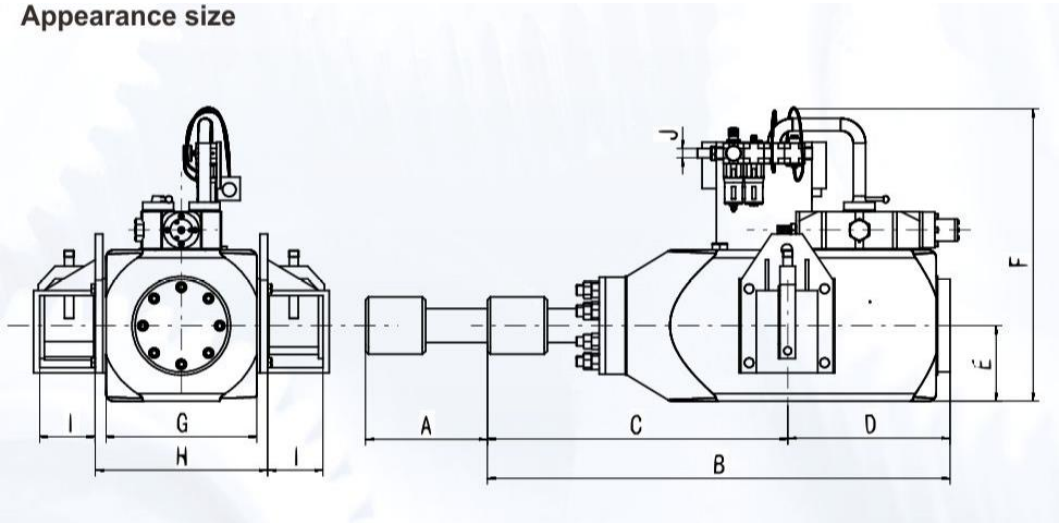

Model	A	B	C	D	E	F	G	H	I
JDXT-100	400	1120	650	470	180	730	360	435	175
JDXT-200	500	1360	830	530	240	850	480	555	175
JDXT-400	600	1550	950	600	315	1000	630	735	250
JDXY-800	700	2100	1340	760	350	1070	700	845	280



◆ Main technical parameter

Model	Unit	JDXT-100	JDXT-200	JDXT-400	JDXT-800
Max impact energy	kj	1	2	4	8
Pressurised air connection	Inch	3/4"	1"	1"	1"
Max wedge dimension	mm	60x80x500	80x120x1000	100x200x2000	All the wedges
Working pressure	MPa	0.6~0.8	0.6~0.8	0.6~0.8	0.6~0.8
Max piston stroke	mm	400	500	600	700
Weight (including bracket)	kg	860	1560	2860	5500
Matched forging hammer hit energy	kj	0~25	25~75	75~150	150~550

◆ Selection of Models

The maximum strike energy depends on the pressure of the air supply of the key driver. It is difficult to determine the maximum size of the wedge that can be loosened or tightened by the relevant models of key driver, because of the different angle, supporting surfaces and surface conditions of the wedge with the bracket style. Customers can calculate according to the following data.

If the slope is 1:100, the maximum wedge size of different models is as follows:

Model	Maximum Wedge Size
JDXT-100	60 x 80 x 500 mm
JDXT-200	80 x 120 x 1000 mm
JDXT-400	100 x 200 x 2000 mm
JDXT-800	All the wedges

◆ Operation instructions

- ✧ Use forklift to fork the bottom spade hole of key driver.
- ✧ The key driver (wedge driver) may only be used if it is in impeccable technical condition whilst adhering to all instructions in the operating instructions.
- ✧ Connect the compressed air source of 0.4-0.6 MPa to key driver.
- ✧ Forklift truck is close to the wedge, adjust the key driver to the mounting wedge, adjust the position of forklift to make the stroke axis of key driver aligns with the center axis of wedge.
- ✧ Manual rotary block is operated to adjust the impact energy. The specific adjustment method is referred to the next page.
- ✧ The proper distance between the hitting head and the wedge is required to ensure that the hammer is not empty.
- ✧ Pay attention to filling the piston with lubricating oil by manual oil pump before each operation.
- ✧ The compressed air supply has to be ensured using clean, dry air with a pressure as constant as possible. Gas source should be reduced by oil-water separator in compressed air to prevent cylinder body from rusting.

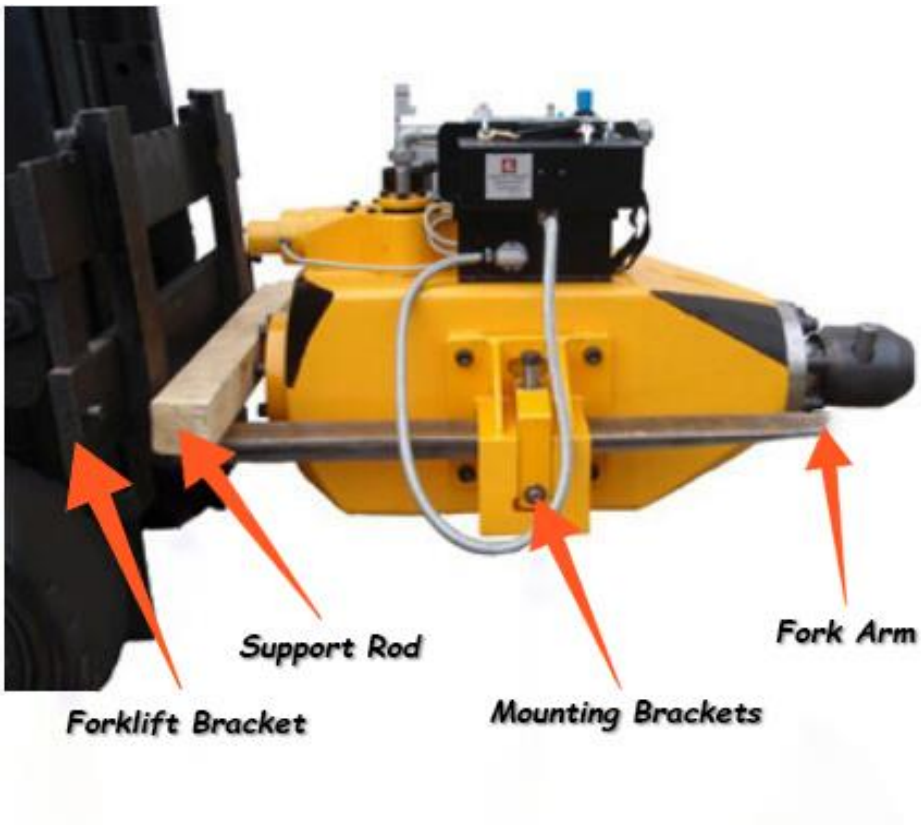

◆ Adjustment of impact energy

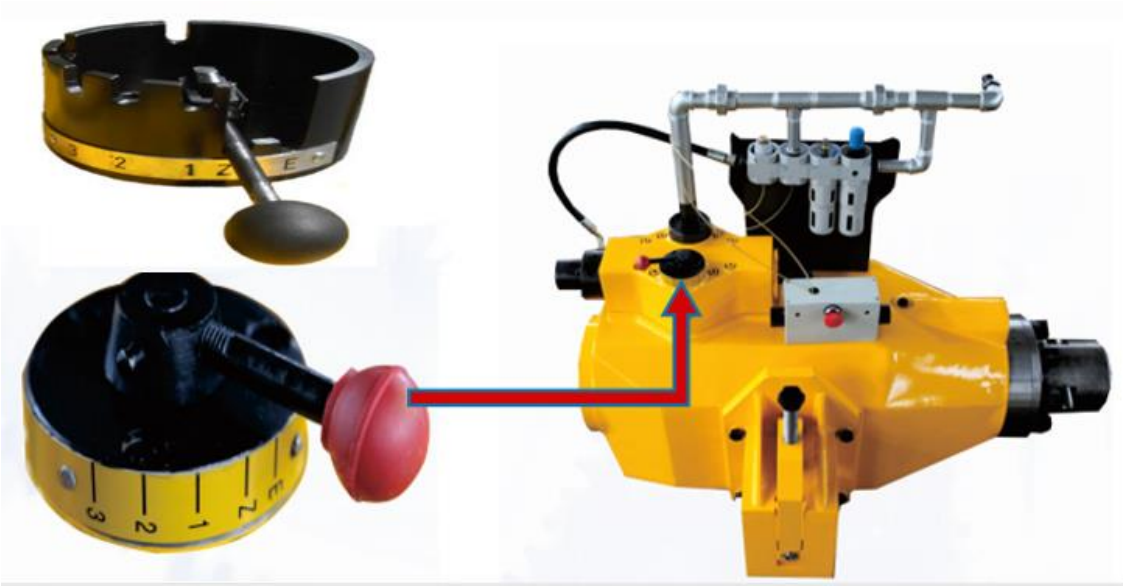

The rotary block in picture above is the central control element of key driver, you can achieve different functions by adjust the rotary slide block to different gears manually.
Gear position Z: In this gear position, the pressure air cannot pass the control value, shut off the supply of pressure air.
Gear position E: Exhaust of accumulator after disconnection of pressure air supply.
Gear position 1-6: The impact energy can be adjusted from light to heavy on gear position 1-6, the gear position 6 is for the largest impact energy.

◆ General Safety Operational Specification

- ✧ The working area and the area behind the forging hammer should be completely isolated.
- ✧ No one is allowed behind the hammer.
- ✧ Only forklift drivers and operators allowed in the isolated hazardous area.
- ✧ Operators must wear the specified protective clothing.
- ✧ The supply of compressed air should be clean, dry and as continuous pressure as possible. If there is humidity in the air, a water distributor should be installed to protect the key driver from corrosion.

◆ Quality Assurance and After-sale Service

- ✧ The warranty period is 12 months. During the warranty period, if there is any equipment failure due to

the manufacturing quality, our company will respond to the foreign customers within 48 hours after receiving the notice and give technical guidance such as troubleshooting. If the parts need to be replaced, they will be replaced for free, except for wearing parts.

- ✧ During the warranty period, if the equipment fails due to the improper use of the buyer, our company will respond to the foreign customers within 48 hours after receiving the buyer's notice and give free technical guidance such as troubleshooting. If we need to provide the replaced parts, we will charge the cost as appropriate.
- ✧ During the warranty period, if the buyer replaces the reusable equipment parts not provided by our company without the approval, resulting in equipment failure and adverse impact on the service life of the equipment, the warranty period of the equipment will be shortened accordingly.
- ✧ Our company provides a lifetime wide range of preferential technical support.

Copyright

This manual contains technical requirements and drawings. Without permission, it shall not be copied, disseminated, utilized, or provided to third parties and manufacturers for the purpose of market competition. If found, the company will pursue its legal liability in accordance with the law.

If there is any conflict between the instructions and the contents of the company's product samples, this manual is just for reference, please contact us for help.

This manual is subject to change without notice.

The right of final interpretation of this manual belongs to SSET.

The copyright of this manual is owned by SSET.

